CR 7 VET

EN

Installation and operating instructions

CE

9000-608-67/02

iM3®

DÜRR MEDICAL

2111V002

EN

Contents

Important information

Product description

Assembly

Usage

Troubleshooting

EN

Appendix

Contact

EN

Important information

1 About this document

These installation and operating instructions represent part of the unit.

DÜRR MEDICAL will not offer any warranty or accept any liability for the safe operation and the safe functioning of the unit if the instructions and information in these installation and operating instructions are not complied with.

The German version of the installation and operating instructions is the original manual. All other languages are translations of the original manual.
These operating instructions apply to:
CR 7 VET Article number: 2137-000-80

1.1 Warnings and symbols

Warnings

The warnings in this document are intended to draw your attention to possible injury to persons or damage to machinery.
The following warning symbols are used:

General warning symbol

The warnings are structured as follows:

SIGNAL WORD

Description of the type and source of danger

Here you will find the possible consequences of ignoring the warning

› Follow these measures to avoid the danger.

The signal word differentiates between four levels of danger:

- **DANGER**
  Immediate danger of severe injury or death
- **WARNING**
  Possible danger of severe injury or death
- **CAUTION**
  Risk of minor injuries
- **NOTICE**
  Risk of extensive material/property damage

Other symbols

These symbols are used in the document and on or in the unit:

Note, e.g. specific instructions regarding efficient and cost-effective use of the unit.

REF Order number

SN Serial number

LOT Lot designation

CE labelling

ETL Certification
CONFORMS TO UL STD 61010-1
CERTIFIED TO CAN/CSA STD C22:2 NO. 61010-1

Manufacturer

Dispose of correctly in accordance with EU Directive 2012/19/EU (WEEE).

Observe the operating instructions.

Refer to the accompanying electronic documents.

Wear protective gloves.

Disconnect all power from the unit.

Warning – dangerous high voltage

Warning - laser beam

Do not reuse

DC current

This way up / store and transport in an upright position

EN


Keep dry


Stacking limits


Fragile, handle with care


Keep away from sunlight


Lower and upper temperature limits


Lower and upper humidity limits


Lower and upper atmospheric pressure limits

1.2 Label

Fig. 1: Laser class 3B

Fig. 2: Warning – laser beams

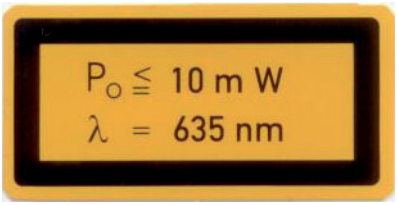

Fig. 3: Information about the laser source

Danger to components due to electrostatic discharge (ESD)

1.3 Copyright information

1.4 ETL certificate

This Class A device complies with Canadian ICES-003.

The equipment has been tested and found to comply with the limits for a class A digital device, pursuant to Part 15 of the FCC rules. These limits are designed to provide reasonable protection against harmful interference when the equipment is operated in a commercial environment. This unit generates, uses and emits radio frequency energy. If the device is not set up and operated in accordance with the installation and operating instructions, this can lead to interference in radio communications. Operation of the equipment in a residential area may cause malfunctions to occur on the device. The operator will be required to remedy such malfunctions or interference at his own expense.

2 Safety

DÜRR MEDICAL has developed and designed this unit in such a way that it does not pose any danger to people or property provided it is properly operated in accordance with the intended use.
Despite this, the following residual risks can remain:

- Personal injury due to incorrect use/misuse
- Personal injury due to mechanical effects
- Personal injury due to electric shock
- Personal injury due to radiation
- Personal injury due to fire
- Personal injury due to thermal effects to skin
- Personal injury due to lack of hygiene, e.g. infection

2.1 Intended use

The unit is intended solely for use in the area of veterinary medicine for the scanning and processing of image data on an image plate.

2.2 Improper use

Any other usage or usage beyond this scope is deemed to be improper. The manufacturer accepts no liability for damage resulting from improper usage. In such cases, the user/operator will bear the sole risk.
The unit is not designed for use in the field of human medicine.

2.3 General safety information

› Always comply with the specifications of all guidelines, laws, and other rules and regulations applicable at the site of operation for the operation of this unit.
› Check the function and condition of the unit prior to every use.
› Do not convert or modify the unit.
› Comply with the specifications of the Installation and Operating Instructions.
› The Installation and Operating Instructions must be accessible to all operators of the unit at all times.

EN

2.4 Specialist personnel

Operation

Unit operating personnel must ensure safe and correct handling based on their training and knowledge.

› Instruct or have every user instructed in handling the unit.

Installation and repairs

› Installation, new adjustments, modifications, upgrades and repairs must be carried out by DÜRR MEDICAL or by person(s) specifically authorised by DÜRR MEDICAL.

2.5 Electrical safety

› Comply with all the relevant electrical safety regulations when working on the unit.

› Never touch the animal or owner and unshielded plug connections on the unit at the same time.

› Replace any damaged cables or plugs immediately.

2.6 Only use original parts

› Only use the accessories and optional accessories stated or approved by DÜRR MEDICAL.

› Only use only original wear parts and replacement parts.

DÜRR NDT accepts no liability for damages resulting from the use of non-approved accessories or optional accessories, or from the use of non-original wear parts or replacement parts.

2.7 Transport

The original packaging provides optimum protection for the unit during transportation.
Where required, original unit packing can be ordered from DÜRR MEDICAL.

DÜRR MEDICAL cannot be held responsible for any damage to the unit resulting from transport in unsuitable packaging; this also applies during the warranty period.

› Only transport the unit in its original packaging.

› Keep the packing materials out of the reach of children.

› Do not expose the unit to any strong vibrations or shocks.

2.8 Disposal

Dispose of correctly in accordance with EU Directive 2012/19/EU (WEEE).

An overview of the waste keys for DÜRR MEDICAL products can be found in the download area at: *www.duerr-medical.de* (Document no. GA10100002).

2.9 Protection from threats from the Internet

The unit is to be connected to a computer that can be connected to the Internet. Therefore, the system needs to be protected from threats from the Internet.

› Use antivirus software and update it regularly. Look for evidence of possible virus infection and, if applicable, check with the antivirus software and remove the virus.

› Perform regular data backups.

› Restrict access to units to trustworthy users, e.g. via a user name and password.

› Make sure that only trustworthy content is downloaded. Only install software and firmware updates that have been authenticated by the manufacturer.

Product description

EN

3 Overview

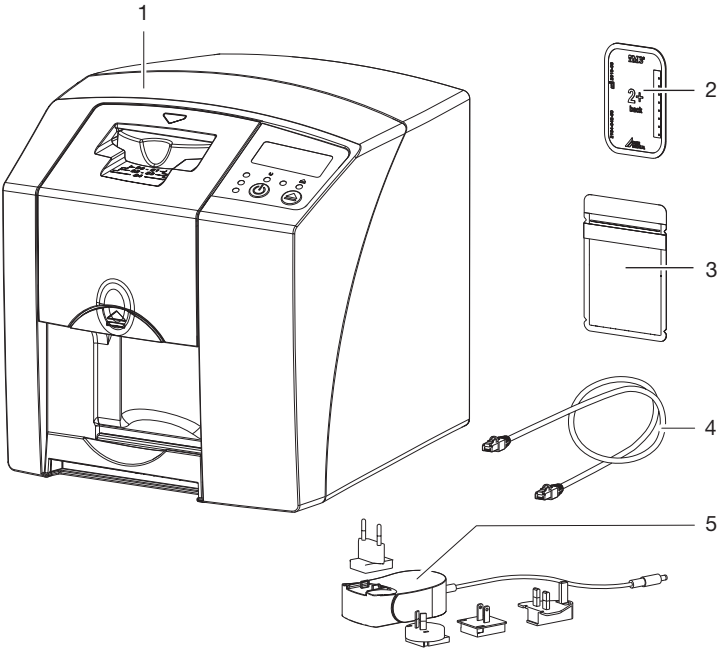

1 CR 7 VET image plate scanner
2 Image plate intraoral
3 Light protection cover intraoral
4 Data cable (USB network cable)
5 Power supply unit with country-specific adapter

EN

3.1 Scope of delivery

The following items are included in the scope of delivery (possible variations due to country-specific requirements and/or import regulations):

CR 7 VET
image plate scanner 2137-01

- CR 7 VET
- Power supply unit
- USB cable
- Network cable
- Vet-Exam Plus Imaging Software
- Vet-Exam Pro Imaging Software
- Protection cover
- IP cleaning wipes (10 pcs)
- Installation and operating instructions
- Quick start instructions

3.2 Accessories

The following items are required for operation of the device, depending on the application:

Image plates

- Image Plate PLUS, size 0
- Image Plate PLUS, size 1
- Image Plate PLUS, size 2
- Image Plate PLUS, size 3
- Image Plate PLUS, size 4
- Image Plate PLUS, size 4C
- Image Plate PLUS, size 5
- Image Plate PLUS, size R3

Light protection covers

- Light Protection Cover Plus, size 0
- Light Protection Cover Plus, size 1
- Light Protection Cover Plus, size 2
- Light Protection Cover Plus, size 3 / R3
- Light Protection Cover Plus, size 4
- Light Protection Cover Plus, size 4C
- Light Protection Cover Plus, size 5

3.3 Optional items

The following optional items can be used with the device:

Wall bracket 2141-001-00
Network cable (5 m) 9000-118-036
USB cable (5 m) 9000-119-027
Bite protector, size 4 (100 pcs) . . . 2130-074-03

3.4 Consumables

The following materials are consumed during operation of the device and must be reordered separately:

Light protection covers

Description	Order number Dürr Medical	Order number iM3
Light Protection Cover Plus, size 0	2134-080-00	X7101
Light Protection Cover Plus, size 1	2134-081-00	X7111
Light Protection Cover Plus, size 2	2134-082-00	X7122
Light Protection Cover Plus, size 3 / R3	2134-083-00	X7133
Light Protection Cover Plus, size 4	2134-084-00	X7144
Light Protection Cover Plus, size 4C	2134108800	XC144
Light Protection Cover Plus, size 5	2134-085-00	X7155

Cleaning and disinfection

IP cleaning wipes (10 pcs.) CCB351A1001

3.5 Wear parts and replacement parts

Wiper blade set 2137-995-00
Roller fixture 2137-210-00E
Drive belt 2137-993-00

Image plates

Description	Order number Dürr Medical	Order number iM3
PLUS image plate, size 0, 2 x 3 cm (2 pcs.)	2134-040-50	X7100
PLUS image plate, size 1, 2 x 4 cm (2 pcs.)	2134-041-50	X7110
PLUS image plate, size 2, 3 x 4 cm (4 pcs.)	2134-042-50	X7120
PLUS image plate, size 3, 2.7 x 5.4 cm (2 pcs.)	2134-043-50	X7130
PLUS image plate, size 4, 5.7 x 7.6 cm (1 pcs.)	2134-044-50	X7140
PLUS image plate, size 4C, 4.8 x 5.4 cm (1 pcs.)	2134104800	XC140
PLUS image plate, size 5, 5.7 x 9.4 cm (1 pcs.)	2134-045-50	X7150
Plus image plate, size R3, 2.2 x 5.4 cm (2 pcs.)	2134104700	X7170

Further image plate formats available on request

Further information about the replacement parts on demand

EN

4 Technical data

4.1 Image plate scanner

Electrical data for the device		
Voltage	V DC	24
Max. current consumption	A	1.25
Output	W	< 30
Type of protection		IP20

Electrical data – power supply unit		
Voltage	V AC	100 - 240
Frequency	Hz	50/60
Protection class		II
Type of protection		IP20
Output	W	< 40
Max. current consumption	A	0.8

Classification		
Laser class (unit) In accordance with IEC 60825-1		1

Laser source		
Laser class In accordance with IEC 60825-1:2014		3B
Wavelength λ	nm	635
Output	mW	10

Noise level		
Ready to scan	dB(A)	approx. 37
During scanning	dB(A)	approx. 55

General technical data		
Dimensions (W x H x D)	mm	226 x 234 x 243
	in	8.9 x 9.2 x 9.6
Weight	kg	approx. 6.5
	lb	approx. 14.3
Duty cycle S2 (in accordance with VDE 0530-1)	min	25
Duty cycle S6 (in accordance with VDE 0530-1)	%	25
Pixel size (selectable)	µm	12.5 - 50

General technical data		
Max. theoretical resolution	Line pairs/mm (Lp/mm)	approx. 40

Network connection		
LAN technology		Ethernet
Standard		IEEE 802.3u
Data rate	Mbit/s	100
Connector		RJ45
Type of connection		Auto MDI-X
Cable type		≥ CAT5

Serial interfaces		
Standard		USB 2.0
Connection (on the unit)		Standard type B

Ambient conditions during operation		
Temperature	°C	+10 to +35
	°F	+50 to +95
Relative humidity	%	20 - 80
Air pressure	hPa	750 - 1060
Height above sea level	m	< 2000
	ft	< 6562

Ambient conditions during storage and transport		
Temperature	°C	-20 to 60
	°F	-4 to +140
Relative humidity	%	10 - 95
Air pressure	hPa	750 - 1060

EN

4.2 Image plate

Ambient conditions during operation		
Temperature	°C	18 - 45
	°F	64 - 113
Relative humidity	%	< 80

Ambient conditions during storage and transport		
Temperature	°C	< 33
	°F	< 91
Relative humidity	%	< 80

Dimensions of intraoral image plates		
Size 0	mm	22 x 35
	in	0.87 x 1.38
Size 1	mm	24 x 40
	in	0.94 x 1.57
Size 2	mm	31 x 41
	in	1.22 x 1.61
Size 3	mm	27 x 54
	in	1.06 x 2.13
Size 4	mm	57 x 76
	in	2.24 x 2.99
Size 4C	mm	48 x 54
	in	1.89 x 2.13
Size 5	mm	57 x 94
	in	2.24 x 3.70
Size R3	mm	22 x 54
	in	0.87 x 2.13

4.3 Type plate

The type plate is located on the rear of the device.

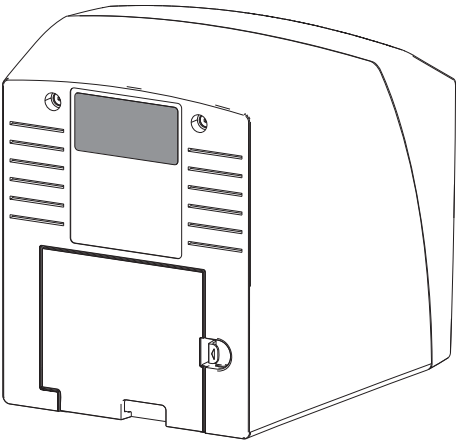

REF	Order number
SN	Serial number

EN

4.4 Declaration of conformity

Name of manufacturer:	DÜRR NDT GmbH & Co. KG
Address of manufacturer:	Höpfigheimer Straße 22 74321 Bietigheim-Bissingen Germany
Name of product:	CR 7 Image plate scanners

We hereby declare that the above product meets all applicable requirements of the directives listed below:

- Electromagnetic Compatibility (EMC) Directive 2014/30/EU in its current version.
- Directive 2011/65/EU on the restriction of the use of certain hazardous substances in electrical and electronic equipment in its current version.

O. Ruzek	O. Lange on behalf of Duerr Dental
CEO	Head of Quality Management

5 Operation

5.1 Image plate scanner

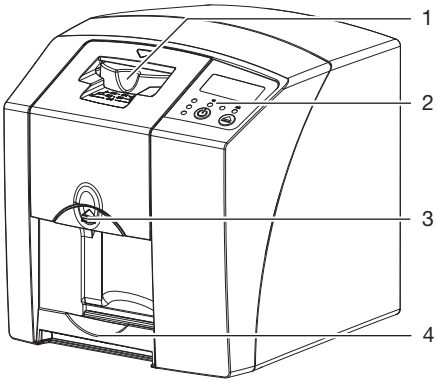

1 Input unit
2 Operating elements
3 Release key
4 Collection tray

The image plate scanner is used to read image data stored on an image plate and transfer the data to imaging software on a computer.
The transport mechanism guides the image plate through the device. The image plate is read using a laser inside the scanner unit. The scanned data is converted into a digital image and transferred to the imaging software.
After scanning, the image plate runs through the erasure unit. Image data still held on the image plate is erased with the aid of bright light.
The image plate is then ejected for re-use.

Operating elements

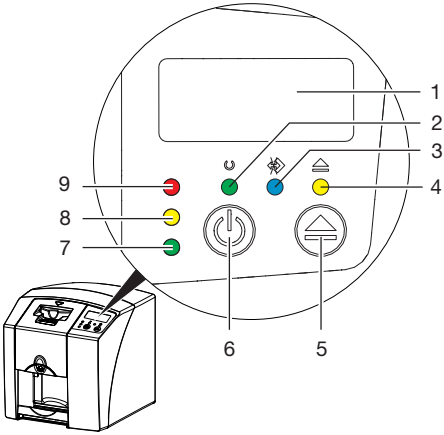

1 Display
2 Green operating LED
3 Blue communication indicator
4 Cleaning display yellow
5 Cleaning button
6 On / off switch
7 Green status LED
8 Yellow status LED
9 Red status LED

The status LEDs display the following status messages:

	Ready for operation
	Not ready for communication
	Device currently switching off
	Cleaning position
	Cover or input unit not correctly mounted
	Error
	Cover missing
	Image plate currently being processed

EN

Image plate currently being processed Light protection cover can be removed and the next image plate can be inserted	
Input unit ready for operation The next image plate can be inserted	
Device starting up from standby mode	

Status LED flashing

Status LED off

Connections

The connections are located on the rear of the unit, underneath the cover.

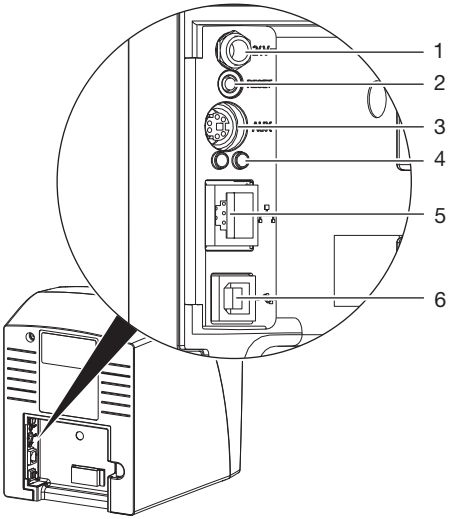

1 Connection for power supply unit
2 Reset button
3 AUX connection for diagnostic units
4 Network connection status LEDs
5 Network connection
6 USB port

5.2 Image plate

The image plate stores X-ray energy, which is re-emitted in the form of light after excitation via the laser. This light is then converted to image information in the image plate scanner.
The image plate has an active side and an inactive side. The image plate must always be exposed on the active side.

When used properly, image plates can be exposed, read and erased several hundred times provided there is no mechanical damage. The image plate must be replaced if there are any signs of damage, e.g. if the protective layer is damaged or there are visible scratches that could interfere with the diagnosis.

Intraoral

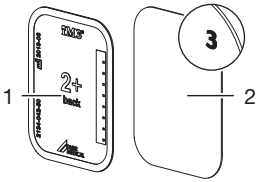

1	Inactive side	Black, with the size and manufacturer information printed on it
2	Active side	Light blue, with positioning aid *3*

Positioning aid *3* is visible on the X-ray image and makes orientation easier during diagnosis.

5.3 Light protection cover

The light protection cover protects the image plate against light.

5.4 Protection cover

The protective cover protects the device against dust and dirt, for example during extended periods in which it is not in use.

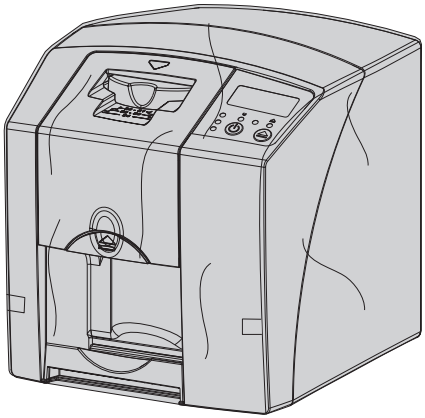

5.5 Bite protector (optional)

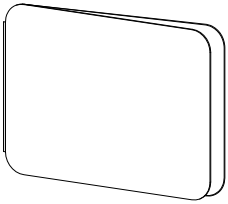

The bite protector protects the image plate size 4 as well as the light protection cover against heavy mechanical damage, e.g. if the patient bites down too hard during the X-ray exposure.

EN

Assembly

Only qualified specialists or persons trained by DÜRR MEDICAL are permitted to install, connect and commission the unit.

6 Requirements

6.1 Installation/setup room

The room chosen for set up must fulfil the following requirements:

- Closed, dry, well-ventilated room
- It should not be a room made for another purpose (e.g. boiler room or wet cell).
- Max. light intensity 1000 Lux, no direct sunlight at the place of installation of the unit
- There should be no large fields of interference (e.g. strong magnetic fields) present that can interfere with the correct operation of the unit.
- Refer to the requirements for environmental conditions in "4 Technical data".

6.2 System requirements

For details of the system requirements for computer systems refer to the separate information sheet (order number 9000-608-100) or visit the website at *www.duerr-medical.de*.

6.3 Monitor

The monitor must comply with the requirements for digital X-ray with a high light intensity and wide contrast range.
Strong ambient light, sunlight falling directly onto the monitor and reflections can make it harder or even impossible to perform a diagnosis based on the X-ray images.

7 Installation

7.1 Carrying the unit

NOTICE

Risk of damage to sensitive components in the unit as a result of shocks or vibrations

› Do not expose the unit to any strong vibrations or shocks.
› Do not move the unit during operation.

7.2 Setting up the unit

Portable and mobile HF communication appliances can interfere with the effectiveness of electrical devices.

› Do not stack the unit next to or together with other appliances.
› If, however, this unit is operated close to other units or stacked with other units, monitor the unit carefully in the configuration selected in order to ensure normal operation.

The unit can be set up as a tabletop unit or mounted on a wall using the wall bracket.
The load-bearing capacity of the table or wall must be suitable for the weight of the unit (see "4 Technical data").

Setting the unit on a table

To prevent errors when scanning the image data, install the unit so it is not exposed to vibrations.

› Place the unit on a firm, horizontal surface.

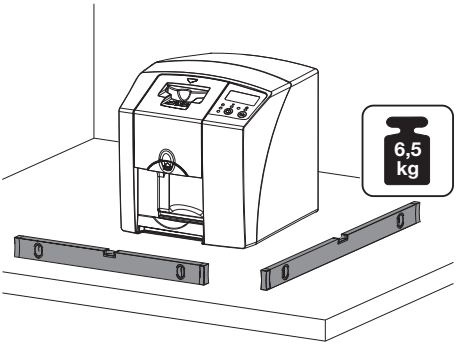

Installing the unit with the wall mounting bracket

The unit can be mounted on a wall with the wall mounting bracket (see "3.3 Optional items").

For installation refer to the installation instructions for the wall mounting (order number 9000-618-162)

7.3 Electrical connections

Safety when making electrical connections

› The device must only be connected to a correctly installed power outlet.
› Do not operate any other systems using the same multiple socket.
› Make sure that none of the electrical cables leading to the unit are under any mechanical tension.
› Before initial start-up check that the mains supply voltage and the voltage stated on the type plate match (see also "4. Technical data").

Connecting the unit to the mains supply

The unit has no main power switch. For this reason it is important that the unit is be set up in such a way that the plug can be easily accessed and unplugged if required.

Requirements:
✓ Properly installed power outlet close to the unit (observe the max. mains cable length)
✓ Easily accessible power outlet
✓ Mains voltage must match the information shown on the type plate of the power supply unit

› Attach the matching country-specific adapter to the power supply unit.

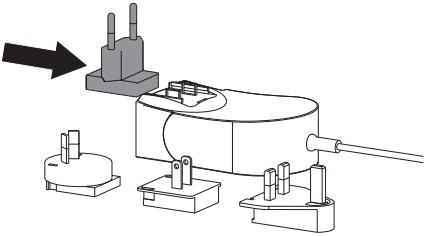

› Remove the cover from the rear of the device.

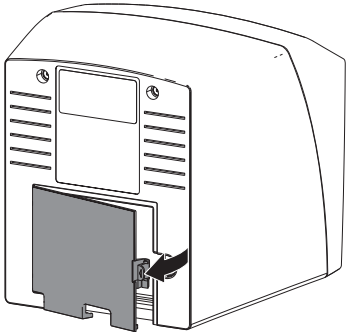

› Plug in the connecting plug of the power supply unit into the socket connection of the device.
› Secure the cable with a cable clip.

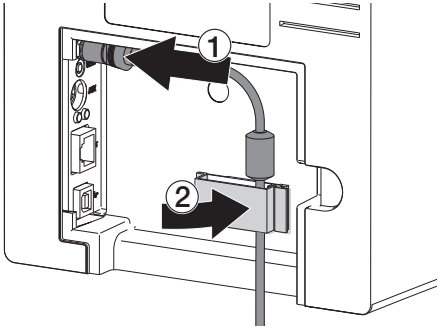

› Plug the mains plug into the power outlet.
› Refit the cover.

7.4 Connecting the unit

The device can be connected either via the USB port or via the network connection. The cables are included in the scope of delivery.

Do not connect the device via the USB port and via the network connection at the same time.

If the device is connected via the USB port and via the network connection at the same time, the network connection will take priority.

EN

Combining devices safely

Take care when connecting units together or to parts of other systems as there is always an element of risk (e.g. due to leakage currents).

› Only connect units when there is no risk of danger to the operator or to the animal/owner.

› Only connect units when it is safe to do so and when there is no risk of damage or harm to the surroundings.

› If it is not 100% clear from the unit data sheet that such connections can be safely made or if you are in any doubt, always get a suitably qualified person (e.g. the manufacturer) to verify that the setup is safe.

– The overall safety of the unit and its main performance features are independent of the network. The device is designed for operation independent of a network. However, some of the functions are not available in this case.

– Incorrect manual configuration can lead to significant network problems. The expert knowledge of a network administrator is required for configuration.

– The device is not suitable for direct connection to the public internet.

The unit is designed for operation in a generally electromagnetic environment that is connected to the public electricity grid, e.g. laboratories and office rooms.

Connecting the unit via the network cable

Purpose of the network connection

The network connection is used to exchange information or control signals between the unit and a software installed on a computer, in order to, e. g.:

– Display parameters
– Select operating modes
– Indicate messages and error situations
– Change unit settings
– Activate test functions
– Transmit data for archiving
– Provide documents concerning the units

› Remove the cover from the rear of the device.

› Connect the supplied network cable to the network connection of the device.

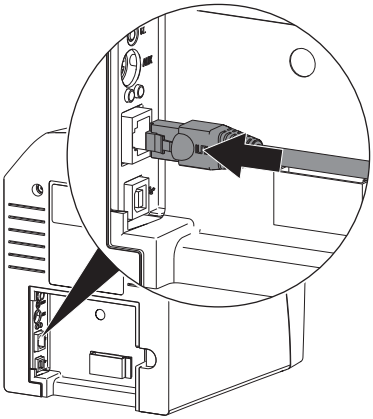

› Refit the cover.

Connecting the unit via the USB port

Do not connect the USB cable to the computer
until prompted to do so by the installation wizard.

› Remove the cover from the rear of the device.

› Connect the USB cable to the device.

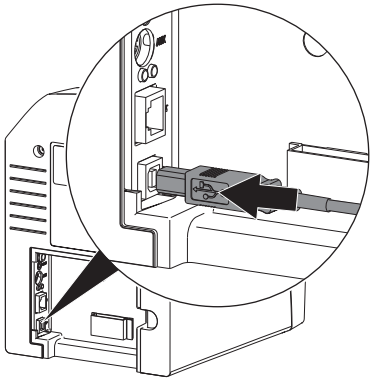

When operating the device, the rear side cover must be mounted.

› Refit the cover.

8 Commissioning

NOTICE

Short circuit due to the build up of condensation

› Do not switch on the unit until it has warmed up to room temperature and it is dry.

8.1 Installing and configuring the unit

The unit supports the following imaging programs:

– Vet-Exam Plus
– Vet-Exam Pro

Installation and configuration may only be carried out by a person trained and qualified by DÜRR MEDICAL or by one of our service technicians.

Refer to the installation and configuration manual "VET-Exam Intra/Plus (article no. 9000-608-126) or to the handbook Vet-Exam Pro (article no. 2181100001).

Set up the network (only with network connection)

› Switch on the network devices (router, PC, and switch).

› Check that TCP port 2006 and UDP port 514 are enabled in the firewall; enable them if necessary.
If you are using the Windows firewall, you do not need to check the ports since you will be asked whether you want to enable them during the driver installation process.

When the unit is first connected to a computer, it applies the language and time settings of the computer.

Network configuration

Various options are available for network configuration:

✓ Automatic configuration via DHCP.
✓ Automatic configuration via Auto-IP for direct connection of unit and computer.
✓ Manual configuration.

› Configure the network settings of the unit via the software.

EN

› Check the firewall and release the ports, if applicable.

Network protocols and ports

Port	Purpose	Service
45123 UDP, 45124 UDP	Unit recognition and configuration	
2006 TCP	Unit data	
514[1)] UDP	Event protocol data	Syslog
2005 TCP, 23 TCP	Diagnosis	Telnet, SSH

1) The port can vary depending on the configuration.

Configuring the unit in Vet-Exam Pro

Configuration is performed directly in Vet-Exam Pro.

› > *Select the unit*.

› Mark the connected unit in the list.

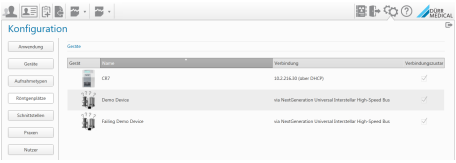

› Click on *Edit connection settings*.

› The unit name (designation) can be changed and information queried working under *General*.

› An IP address can be entered manually and DHCP can be activated / deactivated working under *Connection*.

› Extended functions e. g. IP address 2 can be set working under *Extended*.

Entering a permanent IP address (recommended)

To reset the network settings, keep the unit reset key pressed for 15 - 20 seconds while switching on.

› Working under *Connection*, deactivate DHCP.

› Enter the IP address, subnet mask and gateway.

› Navigate back to *Units* via the navigation bar or close Flyout using .
The configuration is saved.

Testing the device

You can scan in an X-ray image to check that the unit is properly connected.

› Open Vet-Exam Pro.

› Create an X-ray station for the connected unit.

› Log in a demo patient.

› Select the image type (e. g. Intraoral).

› Scan an image plate, see "10.2 Scanning the image data".

Configuring the unit in Vet-Exam Plus

Configuration is carried out with CRNetConfig, which is automatically installed during the installation of Vet-Exam Plus.

› Select *Start* > *All Programs* > *Dürr Medical* > *CRScan* > *CRNetConfig*.

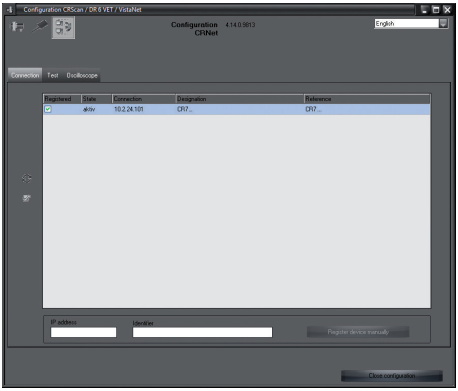

› Click on .
The list of connected units is updated.

› Activate the connected unit in the *Registered* column.
You can also register multiple units.

Configuring the device with a USB port

In the *CRNet device configuration* window you can change the device name (*designation*) and check the configuration.

› Click on .

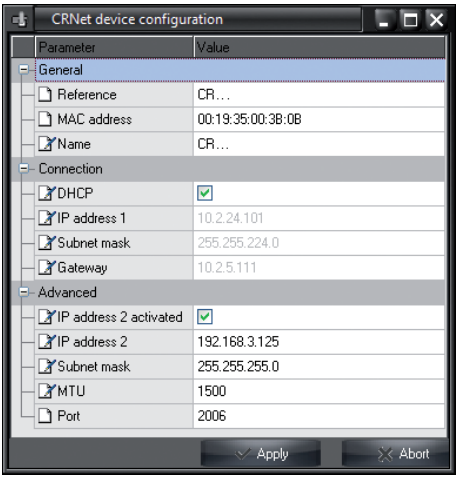

› If necessary change the *name*.

› Click *Apply* to save the configuration.

Configuring the device with a network connection

In the window *CRNet device configuration* you can change the device name (*designation*), manually enter an IP address and query information.

› Click on .

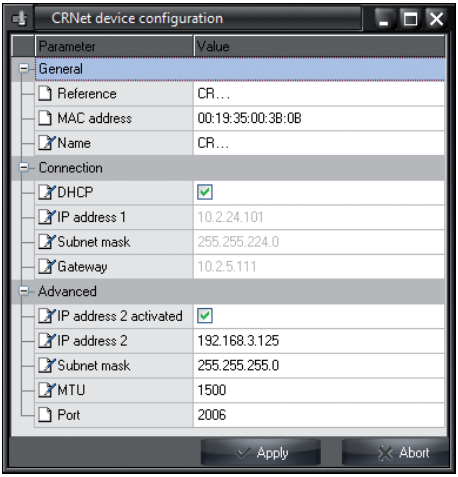

Entering a permanent IP address (recommended)

To reset the network settings, keep the unit reset key pressed for 15 - 20 seconds while switching on.

› Deactivate *DHCP*.

› Enter the IP address, subnet mask and gateway.

EN

› Click on *Apply*.
The configuration is saved.

Testing the device

You can scan in an X-ray image to check that the unit is properly connected.

› Select the *Test* tab.

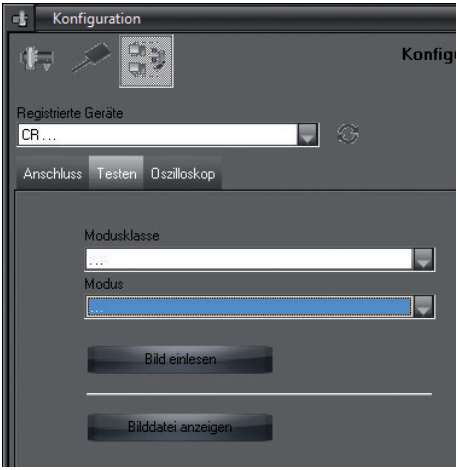

› Select the unit from the *Registered Units* list.
› Select the mode class.
› Select the mode.
› Click on *Scan Image*.
› Scan an image plate, see "10.2 Scanning the image data".

8.2 X-ray unit settings

The following table provides the standard values for the exposure time for a house cat (approx. 6 kg) to a medium-sized dog (approx. 20 kg).

The exposure times listed in the table for a tube length of 20 cm were determined using a dental X-ray unit with a DC emitter (focal spot 0.7 mm; tube length 20 cm). The exposure times for a tube length of 30 cm were calculated from the exposure times for a tube length of 20 cm.

	DC emitter, 7 mA Tube length 20 cm		DC emitter, 7 mA Tube length 30 cm	
	60 kV	70 kV	60 kV	70 kV
Upper jaw				
Incisors	0.1 s	0.08 s	0.2 s	0.16 s
Premolars	0.125 s	0.1 s	0.25 s	0.2 s
Molars	0.16 s	0.125 s	0.32 s	0.25 s
Lower jaw				
Incisors	0.1 s	0.08 s	0.2 s	0.16 s
Premolars	0.125 s	0.1 s	0.25 s	0.2 s
Molars	0.125 s	0.1 s	0.25 s	0.2 s

If 60 kV can be set on the X-ray unit, this setting is preferred.
The standard exposure values for F-speed film (e. g. Kodak Insight) can be used.

› Carry out unit-specific checks and adjustments of the X-ray units based on the standard values.

8.3 Acceptance tests

The required tests (e.g. acceptance tests) must be carried out in accordance with local rules and regulations.

› Find out which tests are required.

› Carry out testing in accordance with local rules and regulations.

Electrical safety checks

› Carry out the electrical safety check according to the national law (e. g. in accordance with IEC 62353).

› Document the results.

EN

Usage

9 Correct use of image plates

CAUTION

Image plates are toxic

Image plates that are not packaged in a light protection cover can cause poisoning when placed in the mouth of the animal or if swallowed.

- Always make sure that the image plate is inside a light protection cover before being placed in the mouth of the animal.
- The image plate or parts of it must not be swallowed.
- If the image plate or parts of it have been swallowed, remove the image plate immediately.
- If the light protection cover is damaged in the mouth of the animal, rinse out the mouth as thoroughly as possible with water.

- Image plates are flexible like X-ray film. However, the image plates should not be bent.

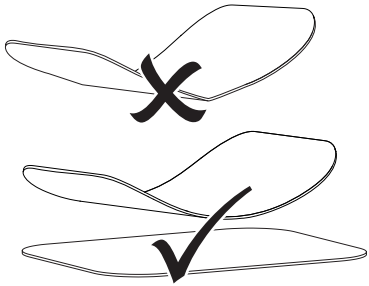

- Do not scratch the image plates. Do not subject the image plates to pressure from hard or pointed objects.

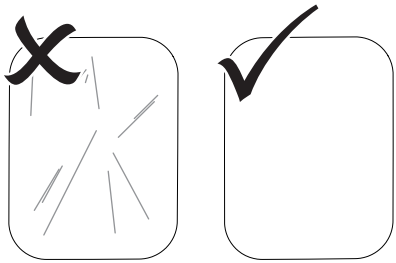

- Do not soil the image plates.
- Protect the image plates against sunlight and ultraviolet light.
  Store the image plates in a light protection cover of the correct size.
- Image plates will be pre-exposed on exposure to natural radiation and stray x-ray radiation. Protect erased and exposed image plates from X-ray interference.
  If the image plate has been stored for longer than one week, erase the image plate prior to use.
- Do not store image plates under hot or moist conditions. Observe the correct ambient conditions (see "4.2 Image plate").
- When used properly, image plates can be exposed, read and erased several hundred times provided there is no mechanical damage. Replace the image plate if there are any signs of damage (e.g. protective layer is damaged or visible scratches) that could interfere with the diagnosis.
- Clean image plates properly (see "11 Cleaning and disinfection").

10 Operation

CAUTION

The image data on the image plate is not permanent.

The image data is altered by light, natural X-ray radiation and scattered X-ray radiation. This will lead to a reduction in diagnostic information and clarity.

› Read the image data within 30 minutes of exposure.
› Never handle exposed image plates without the light protection cover.
› Do not subject an exposed image plate to X-ray radiation before or after the scanning process. Do not X-ray during the scanning process if the unit is in the same room as the X-ray tube.
› Image plates must only be read using an image plate scanner that is approved by DÜRR MEDICAL.

10.1 X-ray

The procedure is described using a size 2 Image Plate Plus as an example.

Required accessories:
– Image plate
– Light protection cover the same size as the image plate

WARNING

Risk of cross contamination when not using the light protection cover or when using the light protection cover more than once

› Do not use an image plate without a light protection cover.
› Do not use the light protection cover more than once (disposable item).

WARNING

Danger due to re-use of products intended for single use

The disposable item is damaged after use and cannot be reused.

› Dispose of disposable items after use.

Preparing the X-ray

✓ The image plate has been cleaned.
✓ The image plate is not damaged.
› If using it for the first time or if it has been stored for over a week: erase the image plate (see "10.3 Erasing the image plate").
› Completely slide the image plate into the light protection cover. The black (inactive) side of the image plate must be visible.

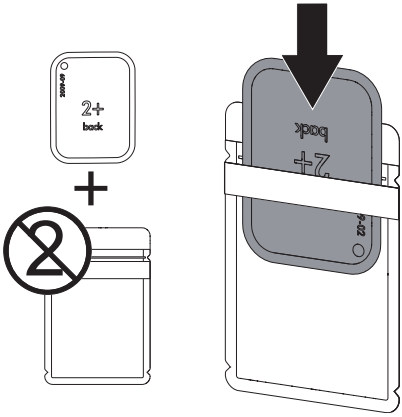

› Pull off the adhesive strip and close the light protection cover tightly by pressing together firmly.

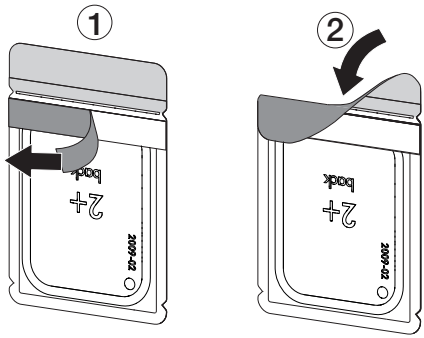

EN

› Disinfect the light protection cover with a disinfection wipe (e.g. 70% 2-propanol (isopropyl alcohol)) immediately before placing it in the mouth of the animal.

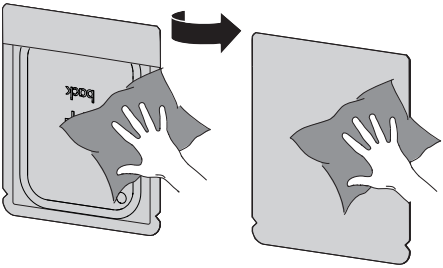

Taking the X-ray image

Wear protective gloves.

› Place the image plate in the light protection cover in the mouth of the animal.
When doing this, make sure that the active side of the image plate points towards the X-ray tube.

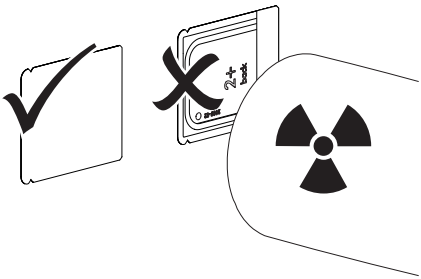

› Set the exposure time and setting values on the X-ray unit (see "8.2 X-ray unit settings").
› Record an X-ray image.
The image data must be scanned within 30 minutes.

Preparing for scanning

CAUTION

Light erases the image data on the image plate

› Never handle exposed image plates without the light protection cover.

Wear protective gloves.

› Take the image plate with the light protection cover out of the mouth of the animal.

WARNING

Contamination of the unit

› Clean and disinfect the light protection cover before removing the image plate.

› In the event of heavy soiling, e.g. from blood, dry clean the light protection cover and protective gloves, e.g. wipe with a clean cellulose cloth.
› Disinfect the light protection cover and protective gloves with a disinfection wipe (e.g. 70 % 2-propanol (isopropyl alcohol)).

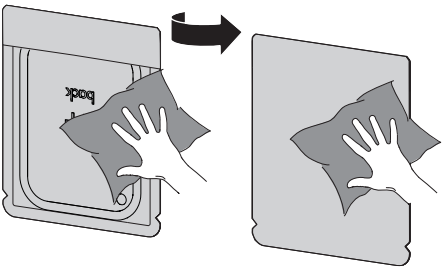

› Place the light protection cover with the image plate on the disinfection wipe.

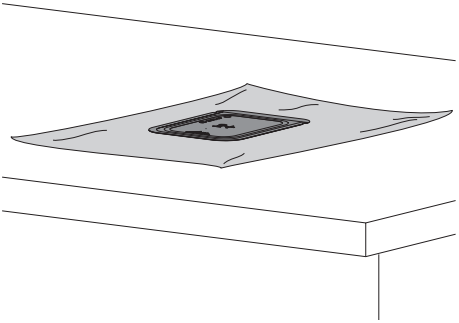

› Allow the light protection cover to fully dry.
› Pull off the protective gloves, disinfect and clean the hands.

NOTICE

Powder from the protective gloves on the image plate can damage the unit during scanning

› Completely clean all traces of the protective glove powder from your hands before handling the image plate.

› Tear open the light protection cover along the adhesive edge.

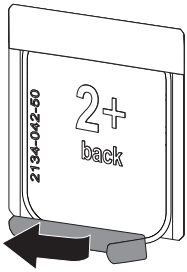

10.2 Scanning the image data

Starting the image plate scanner and software with Vet-Exam Pro

The process of reading out the data is described here for the imaging software Vet-Exam Pro.

For further information on using the imaging software, refer to the relevant manual.

› Press the on / off switch⏻ to switch on the device.
› Switch on the computer and monitor.
› Start Vet-Exam Pro.
› Select the owner and animal.
› Select the corresponding image type in the menu bar.
› Select the device.
› Set acquisition mode.
Recording starts directly.

Result:
The status LED illuminates green.

Starting the image plate scanner and software with Vet-Exam Plus

The process of reading out the data is described here for the imaging software Vet-Exam Plus.

For further information on using the imaging software, refer to the relevant manual.

› Press the on / off switch⏻ to switch on the device.
› Switch on the computer and monitor.
› Start Vet-Exam Plus.
› Select the patient.
› Select the exposure values in the X-ray module.
› Set the required resolution.

EN

› Click the *Scan* button.
The status LED illuminates green.

Scanning the image plate

To avoid the mix up of X-ray images, only scan the X-ray images from the selected patient.

› Place the light protection cover with the image plate centrally and straight onto the input unit. The opened side of the light protection cover faces down, the inactive side of the image plate faces the operator.

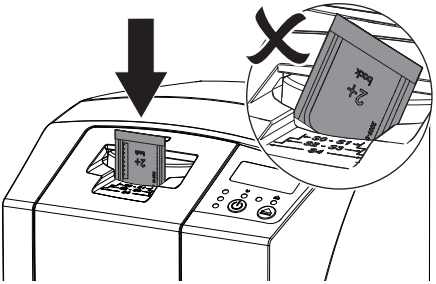

The fixing mechanism moves forwards automatically and takes hold of the light protection cover with image plate.

› Slide the image plate out of its light protection cover downwards into the device until the image plate is automatically drawn in.

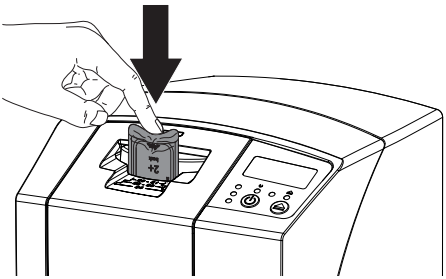

The light protection cover is held in place by the fixing mechanism and is not transported into the unit.
The image data is automatically transmitted to the imaging software. The progress of the scanning process is displayed in the preview window on the monitor.
After it has been scanned, the image plate is erased and drops into the collection tray.

› While the yellow status LED is lit up:
Do not remove the light protection cover, and do not insert a new image plate.

› When the green and yellow status LEDs light up:
Remove the empty light protection cover.

› When the green status LED lights up:
Save the X-ray image.

› Remove the empty light protection cover.

› Remove the image plate and prepare it for taking a new X-ray.

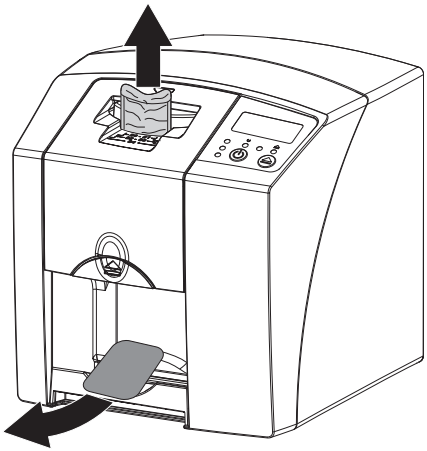

10.3 Erasing the image plate

The image data is automatically erased after scanning.
The special *ERASE* mode only activates the erasure unit of the image plate scanner. No image data is read.
The image plate needs to be erased using the special mode in the following cases:

– The first time the image plate is used, or if it is stored for longer than a week.
– Due to an error, the image data on the image plate has not been erased (software error message).

› Select the special *ERASE* mode in the software.

› Insert the image plate (see "10.2 Scanning the image data").

10.4 Switch off the unit.

› Press the on/off switch ⏻ for 3 seconds.
While the unit is shutting down the operating and communication LEDs flash.
As soon as the unit has shut down it switches off completely. The LEDs go out.

Use of a protective cover

The protective cover protects the device against dirt and dust during extended periods in which it is not used.

WARNING

Danger of suffocation

› Store the protective cover out of the reach of children.

› Pull the protective cover over the device so that it is completely covered. Make sure that the markings are at the front.

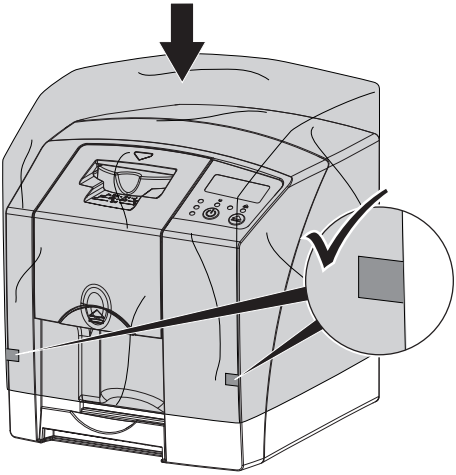

› Store the protective cover in a safe place when it is not in use.

11 Cleaning and disinfection

When cleaning and disinfecting the unit and its accessories, observe country-specific directives, standards and specifications for veterinary products as well as the specific specifications for veterinary practices and clinics.

NOTICE

The use of unsuitable agents and methods can damage the unit and accessories as well as adversely affect the health of animals

Do not use any products based on phenolic compounds, halogen-releasing compounds, strong organic acids or oxygen-releasing compounds, as they may damage the materials.

› DÜRR MEDICAL recommends that any soiling be removed with a soft, lint-free cloth that has been dampened with cold tap water.
› For disinfection, DÜRR MEDICAL recommends using 70% 2-propanol (isopropyl alcohol) on a soft, lint-free cloth.
› Read the operating instructions for the disinfectants.

Wear protective gloves.

11.1 Image plate scanner

Unit surfaces

The unit surface must be cleaned and disinfected of any contamination or soiling.

NOTICE

Liquid can cause damage to the unit.

› Do not spray the unit with cleaning and disinfectant agents.
› Make sure that liquid does not get inside the unit.

› Remove any soiling with a soft, lint-free cloth that has been dampened with cold tap water.
› To disinfect, use 70 % 2-propanol (isopropyl alcohol) on a soft, lint-free cloth.

EN

Input unit

The input unit must be cleaned and disinfected if there are indications of contamination or visible dirt.

> **NOTICE**
>
> **Heat can damage plastic parts.**
>
> › Do not use a thermal disinfector or steam steriliser on any parts of the device.

› Press the ⏏ button.
The fixing mechanism moves into the cleaning position.
› Press the release button and remove the cover upwards at the same time.

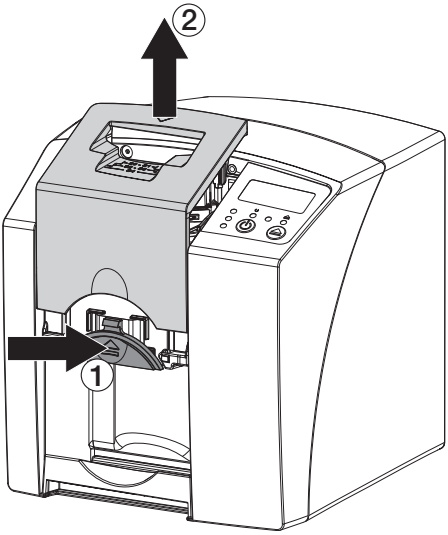

› Remove the fixing mechanism by moving it upwards.

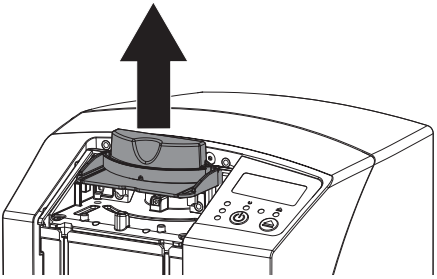

› Clean the cover, fixing mechanism and inside parts with a moist, soft, lint-free cloth.

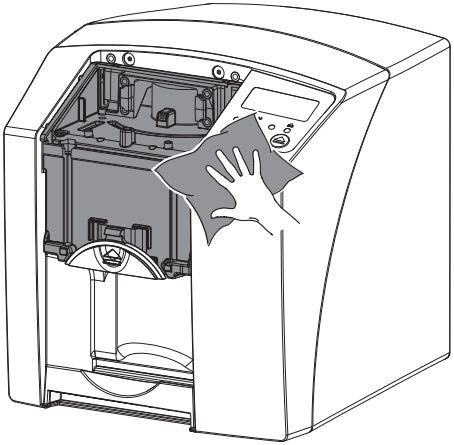

› To disinfect the cover, fixture and internal parts, use 70% 2-propanol (isopropyl alcohol) on a soft, lint-free cloth.
› Remount the fixing mechanism.
› Remount the cover.
› Press the ⏏ button.
The fixing mechanism moves into the starting position.

11.2 Light protection cover

The surface of the unit must be cleaned and disinfected if it is contaminated or soiled.

› Before and after placement, disinfect the light protection cover with 70 % 2-propanol (isopropyl alcohol) on a soft, lint-free cloth.
› Allow the light protection cover to completely dry before using it.

11.3 Image plate

Cleaning and disinfection wipes are unsuitable for cleaning image plates and may cause damage to them.
Only use a cleaning agent that is compatible with the materials:
DÜRR MEDICAL recommends the IP Image Plate Cleaning Wipe (see "3.4 Consumables"). Only

this product has been subjected to material compatibility testing by DÜRR MEDICAL.

NOTICE

Heat or humidity will damage the image plate.

- Do not steam sterilise the image plate.
- Do not immersion-disinfect the image plate.
- Only use approved cleaning agents.

- Soiling on both sides of the image plate should be cleaned off with a soft, lint-free wipe prior to every use.
- Remove resistant or dried on dirt with the image plate cleaning wipe. When doing this, follow the instructions for use for the cleaning wipe.
- Allow the image plate to completely dry before using it.

11.4 Protection cover

Clean the surface of the protective cover if it is obviously dirty.

- Clean the protective cover with a soft, lint-free cloth that has been moistened with cold tap water.
- Only fit the protective cover to a unit that has been cleaned and disinfected.

EN

12 Maintenance

12.1 Recommended maintenance schedule

Only specialist, trained staff or personnel trained by DÜRR MEDICAL are permitted to service the unit.

Prior to working on the unit or in case of danger, disconnect it from the mains.

The recommended maintenance intervals are based on using the device for 15 intraoral images per day on 220 working days per year.

Maintenance interval	Maintenance work
Annually	› Visually inspect the device.
	› Check the image plates for signs of scratches and change if necessary.
Every 3 years	› Change the wiper blade set.
	› Change the roller fixtures.
	› Change the drive belt.

EN

Troubleshooting

13 Tips for operators and service technicians

Any repairs exceeding routine maintenance may only be carried out by qualified personnel or our service.

Prior to working on the unit or in case of danger, disconnect it from the mains.

13.1 Poor X-ray image

Error	Possible cause	Remedy
X-ray image does not appear on the monitor after scanning	Image plate inserted the wrong way round, inactive side was scanned	› Scan the image plate again immediately, making sure you feed it in correctly in the process.
	Image data on the image plate has been erased, e.g. by ambient light	› Always scan the image data of the image plate as quickly as possible.
	Fault on the unit	› Inform a Service Technician.
	No image data on image plate, image plate not exposed	› Expose the image plate.
	X-ray unit is faulty	› Inform a Service Technician.
X-ray image too dark	X-ray dose too high	› Check X-ray parameters.
	Incorrect brightness/contrast settings in the software	› Adjust the brightness of the X-ray image in the software.
X-ray image too bright	Exposed image plate has been exposed to ambient light	› Always scan the image data of the image plate as quickly as possible.
	X-ray dose too low	› Check X-ray parameters.
	Incorrect brightness/contrast settings in the software	› Adjust the brightness of the X-ray image in the software.
X-ray image only shadowy	The X-ray dose on the image plate was insufficient	› Increase X-ray dose.
	Amplification (HV value) is set too low in the software	› Increase amplification (HV value).
	Unsuitable scanning mode selected	› Select a suitable scanning mode.
	The setting for the threshold value is too high	› Reduce the threshold value.
Top or bottom bulge in the X-ray image	Image plate fed in off-centre and at an angle	› Insert the image plate centrally and straight.

EN

Error	Possible cause	Remedy
X-ray image is mirror-inverted	Image plate exposed on the wrong side.	› Insert the image plate correctly in the light protection cover.
		› Position the image plate correctly.
Ghosting or double exposure on X-ray image	Image plate exposed twice	› Only expose the image plate once.
	Image plate not sufficiently erased	› Check the erasure unit is working correctly. › Inform a service technician if the problem persists.
X-ray image mirrored in one corner	Image plate bent during X-ray exposure	› Do not bend the image plate.
Shadow on the X-ray image	Image plate removed from the light protection cover before scanning	› Do not handle image plates without a light protection cover. › Store the image plate in a light protection cover.
X-ray image cut off, part missing	The metal part of the X-ray tube is in front of the X-ray beam	› When taking an X-ray, make sure there are no metal parts between the X-ray tube and the patient.
		› Check X-ray tube.
	Faulty edge masking in imaging software	› Deactivate edge masking.
Software unable to combine the data to make a complete image	The X-ray dose on the image plate was insufficient	› Increase X-ray dose.
	Amplification (HV value) is set too low in the software	› Increase amplification (HV value).
	Unsuitable scanning mode selected	› Select a suitable scanning mode.
	The setting for the threshold value is too high	› Reduce the threshold value.
X-ray image has strips on image	Image plate has been pre-exposed, e.g. by natural radiation or stray X-ray radiation	› If the image plate has been stored for longer than one week, erase the image plate prior to use.
	Parts of image plate exposed to light during handling	› Do not expose used image plates to bright light. › Scan image data within half an hour after the exposure.
	Image plate dirty or scratched	› Clean the image plate. › Replace scratched image plates.

Error	Possible cause	Remedy
Light strips in the scanning window	Too much incident ambient light during the scanning process	› Darken the room. › Turn the unit so that the light does not fall directly onto the input unit.
Horizontal, grey lines on the X-ray image, extending beyond the left and right image edge	Transport slipping	› Clean the transport mechanism, replace the transport belts if necessary.
X-ray image is stretched lengthwise with bright, horizontal stripes	Incorrect light protection cover or image plate used	› Only use original accessories.
X-ray image split vertically into two halves	Dirt in the laser slit (e.g. hair, dust)	› Clean the laser slit.
X-ray image with small bright spots or clouding	Micro scratches on the image plate	› Replace the image plate.
Lamination of the image plate becoming detached at the edge	Incorrect retainer system used	› Only use original image plates and film retainer systems.
	Image plate handled incorrectly.	› Use the image plate correctly. › Observe the operating instructions for the image plates and film retainer systems.

13.2 Software error

Error	Possible cause	Remedy
"Too much ambient light"	Unit exposed to too much light	› Darken the room. › Turn the unit so that no light can fall directly into the entry slot.
"Incorrect power supply unit"	Incorrect power supply unit connected	› Use the supplied power supply unit.
"Overtemperature"	Laser or erasure unit too hot	› Switch off the unit and allow it to cool.
"Erasure unit fault"	LED defective	› Inform a Service Technician.

EN

Error	Possible cause	Remedy
Imaging software does not recognise the unit	Unit not switched on	› Switch on the unit.
	Connecting cable between device and computer not correctly connected	› Check the connecting cable.
	Computer does not detect any connection to the unit.	› Check the connecting cable. › Check the network settings (IP address and subnet mask).
	Hardware fault	› Inform a Service Technician.
	The IP address of the device is being used by another unit	› Check the network settings (IP address and subnet mask) and assign a unique IP address to every device. › Inform a service technician if the problem persists.
Unit does not appear in the selection list in CRScanConfig	Unit is connected behind a router	› Configure the IP address without an intermediate router on the unit. › Reconnect the router. › Manually enter the IP address in CRScanConfig and register the unit.
	The IP address of the device is being used by another unit	› Check the network settings (IP address and subnet mask) and assign a unique IP address to every device. › Inform a service technician if the problem persists.
Unit appears in the selection list in CRScanConfig, but connection is not possible	Subnet masks of the computer and the unit do not match	› Check subnet masks, adjust if necessary.
Error message "E2490"	The connection to the unit was interrupted while the software was still attempting to communicate with the unit	› Restore the connection to the unit. › Repeat the process.
Error during data transmission between unit and computer. Error message "CRC error timeout"	Connecting cable used is incorrect or too long	› Only use original cables.

13.3 Fault on the unit

Error	Possible cause	Remedy
Unit does not switch on	No mains voltage	› Check the mains cable and plug connection and replace if necessary.
		› Check the power supply unit. › If the green status LED does not light up, replace the power supply unit.
		› Check the mains fuse in the building.
	On / off switch is defective	› Inform a Service Technician.
Unit switches back off after a short time	Mains cable or power supply unit plug not inserted correctly	› Check the mains cable and plug connections.
	Hardware fault	› Inform a Service Technician.
	Mains supply voltage too low	› Check the mains voltage.
Unit is on but none of the indicator LEDs are lit up (status, error or operating LEDs)	Display defective	› Inform a Service Technician.
Loud operating noises after switching on lasting more than 30 seconds	Radiation deflector defective	› Inform a Service Technician.
Unit not responding	The unit has not yet completed the startup procedure	› After switching on, wait 20 - 30 seconds until the startup procedure has finished.
	Unit is blocked by the firewall	› Enable the ports for the unit in the firewall settings.
Network connection has been disconnected	Connecting cable between device and computer not correctly connected	› Check the connecting cable.
	The IP address of the device is being used by another unit	› Check the network settings (IP address and subnet mask) and assign a unique IP address to every device. › Inform a service technician if the problem persists.

13.4 Error message on display

Error	Possible cause	Remedy
Error code 1008	Connection interrupted	› Update the firmware.
Error code 1010	Temperature of unit too high	› Allow the unit to cool down. › Inform a Service Technician.
Error code 1022	Subassembly not initialised	› Fault in software, update the software if required. › Inform a Service Technician.

EN

Error	Possible cause	Remedy
Error code 1024	Internal data communication fault	› Switch the unit off and back on again. › Update the firmware. › Darken the room. › Turn the unit so that no light can fall directly into the entry slot.
Error code 1026	Incorrect acquisition mode	› Select a different acquisition mode › Inform a Service Technician. › Update the firmware. › Reset the scanning modes to the factory settings via the unit interface or the Imaging Software.
Error code 1100	Permitted time for scan process exceeded	› Inform a Service Technician. › Check the belt drive. › Check for blockage, remove image plate from unit.
Error code 1104	Erasure unit fault	› Inform a Service Technician. › Replace the erasure unit.
Error code 1116	Drive feed blocked	› Remove the blockage. › Inform a Service Technician.
Error code 1117	Feed position error	› Inform a Service Technician. › Check the feed (ease of movement, drive belts).
Error code 1118	Input unit cover open	› Close the cover. › Deactivate cleaning mode.
Error code 1121	Input unit fixing mechanism missing	› Insert the fixation mechanism. › Deactivate cleaning mode.
Error code 1153	Unit fault	› Switch the unit off and back on again. › Update the firmware.
Error code 1154	Internal data communication fault	› Switch the unit off and back on again. › Update the firmware.
Error code 1160	Final radiation deflector rotation speed not attained	› Inform a Service Technician. › Update the firmware. › Replace the radiation deflector subassembly if the problem occurs regularly.
Error code -1171	Fault on laser	› Send the unit for repair.
Error code 1172	SOL sensor timeout Fault on the laser, SOL sensor or radiation deflector assembly	› Inform a Service Technician. › Update the firmware.

Error	Possible cause	Remedy
Error code 10000	Unit exposed to too much light	› Darken the room. › Turn the unit so that no light can fall directly into the entry slot.
Error code 10009	Internal communication error warning; unit remains ready for operation	› Update the firmware.
Error code 10015	Image plate fed in off-centre	› Insert the image plate centrally.
Error code 2	System error during startup of the unit	› Switch the unit off and back on again. › Update the firmware.

EN

Appendix

14 Scanning times

The scanning time corresponds to the time taken for complete scanning of image data and depends on image plate format and pixel size.
The time to image will depend largely on the computer system used and its work load. Times stated are approximate.

Theoretical resolution (LP/mm)	**40**	**25**	**20**	**10**
Pixel size (µm)	**12.5**	**20**	**25**	**50**
Size 0 (2 x 3)	26 s	16 s	13 s	6 s
Size 1 (2 x 4)	32 s	20 s	16 s	8 s
Size 2 (3 x 4)	32 s	20 s	16 s	8 s
Size 3 (2.7 x 5.4)	40 s	25 s	20 s	10 s
Size 4 (5.7 x 7.6)	53 s	33 s	27 s	14 s
Size 4C (4.8 x 5.4)	40 s	25 s	20 s	10 s
Size 5 (5.7 x 9.2)	70 s	42 s	35 s	16 s
Size R3 (2.2 x 5.4)	40 s	25 s	20 s	10 s

15 File sizes (uncompressed)

The actual file size will depend on the image plate format and the pixel size. File sizes stated are approximate and have been rounded upwards.
Suitable compression methods can considerably reduce the file size without loss of data.

Theoretical resolution (LP/mm)	**40**	**25**	**20**	**10**
Pixel size (µm)	**12.5**	**20**	**25**	**50**
Size 0 (2 x 3)	9.86 MB	3.85 MB	2.46 MB	0.62 MB
Size 1 (2 x 4)	12.29 MB	4.80 MB	3.07 MB	0.77 MB
Size 2 (3 x 4)	16.27 MB	6.36 MB	4.07 MB	1.02 MB
Size 3 (2.7 x 5.4)	19.01 MB	7.43 MB	4.75 MB	1.19 MB
Size 4 (5.7 x 7.6)	55.45 MB	21.66 MB	13.86 MB	3.47 MB
Size 4C (4.8 x 5.4)	31.64 MB	12.36 MB	7.91 MB	1.98 MB
Size 5 (5.7 x 9.2)	64.00 MB	25.00 MB	16.00 MB	4.00 MB
Size R3 (2.2 x 5.4)	15.00 MB	6.00 MB	4.00 MB	1.00 MB

EN

Contact

16 Addresses

16.1 iM3 Pty ltd Australia

Southern Hemisphere including Asia

iM3 Pty ltd Australia
21 Chaplin Drive
Lane Cove NSW 2066
Australia
Tel.: +61 2 9420 5766
Fax: +61 2 9420 5677
www.im3vet.com
sales@im3vet.com

16.2 iM3 Dental Limited

Europe, Russia, CIS countries, United Arab Emirates, North Africa

iM3 Dental Limited
Unit 9, Block 4, City North Business Park
Stamullen, Co. Meath. Ireland
Tel.: +353 16911277
www.im3vet.com
support@im3dental.com

16.3 iM3 Inc. USA

America and Canada

iM3 Inc. USA
12414 NE 95th Street
Vancouver, WA 98682
USA
Tel.: +1800 664 6348
Fax: +1 360 254 2940
www.im3vet.com
info@im3usa.com

Vertreiber/Distributor:

Australia/Corporate: iM3 Pty Ltd
Europe: iM3 Dental Limited
USA: iM3 Inc.
www.im3vet.com

Hersteller / Manufacturer:

DÜRR NDT GmbH & Co. KG
Division DÜRR MEDICAL
Höpfigheimer Str. 22
74321 Bietigheim-Bissingen
Germany
Fon: +49 7142 99381-0
www.duerr-medical.de
info@duerr-medical.de